BigBattery

Own Your Power

48V NEXUS 2
USER MANUAL

Version 1.1

© 2026 BIGBATTERY, LLC. ALL RIGHTS RESERVED
VERSION 1.1 | INFORMATION SUBJECT TO CHANGE WITHOUT NOTICE
MODEL SKU: F-NXUS2-48161-G1

SCAN THE QR CODE FOR THE LATEST VERSION

VERSION HISTORY

Edition	Date	Chapters	Reason for Change
1.0	05/03/2026	All	Manual development
1.1	10/16/2026	5	Tech Specification Corrections

Table of Contents

1. Definition of Terms.... 4
2. Safety Instructions.... 5
3. Introduction.... 7
   3.1 Product Description.... 7
   3.2 Features & Applications.... 8
4. Packed Components.... 9
   4.1 NEXUS 2 Battery.... 9
5. Product Specifications.... 10
   5.1 NEXUS 2 Overview.... 10
   5.2 NEXUS 2 System Specs.... 11
   5.3 NEXUS 2 Battery Diagram.... 12
   5.4 NEXUS 2 Interface.... 13
   5.5 Display Panel.... 14
   5.6 Communication Ports Description.... 15
   5.7 Battery Communication Address.... 16
6. Installation.... 17
   6.1 Installation Safety Guidelines.... 17
   6.2 Installation Requirements.... 17
   6.3 NEXUS 2 System Installation.... 18
      6.3.1 Preparation before installation.... 18
      6.3.2 NEXUS 2 System Mounting.... 18
      6.3.3 NEXUS 2 System Connections.... 19
   6.4 NEXUS 2 System Wiring Connection Diagrams.... 23
      6.4.1 Battery-Inverter Connection Diagram.... 23
   6.5 Grounding (Optional).... 24
7. Battery Commissioning.... 25
   7.1 Supported Inverters.... 25
8. Battery Operation Guide.... 26
   8.1 Charging.... 26
   8.2 Discharging.... 26
   8.3 State of Charge.... 27
   8.4 Storage.... 27
   8.5 Extend the life of your Battery.... 28
9. Service.... 29
   9.1 Troubleshooting.... 29

9.2 Maintenance..... 30
9.3 Monitoring Software.....30
10. Recycling.....31
11. Warranty & Returns..... 32

1. Definition of Terms

- AWG – American Wire Gauge
- A — Amp(s)
- Ah — Amp hour(s)
- AC — Alternating Current
- Battery Module — Single battery
- Battery System — Two or more battery modules connected to a control box
- BMS — Battery Management System
- Capacity — Measure of stored energy, typically in Ah or mAh
- Control Box — Master BMS Unit
- Cell Balancing — Process of ensuring uniform charge among cells in a battery
- Cycle Life — Total charge-discharge cycles before capacity decline
- C-rating — Charging/discharging rate relative to battery capacity
- DC — Direct Current
- DOD – Depth of Discharge
- ESS – Energy Storage System
- kW — Kilowatt
- kWh — Kilowatt-hour
- LFP — Lithium Iron Phosphate or LiFePO4
- mm — Millimeter(s)
- mV — Millivolt(s)
- Overcharge — Charging beyond recommended voltage limits
- PPE — Personal Protective Equipment
- PV — Photovoltaic
- Self-Discharge — Natural battery discharge over time
- State of Charge (SOC) — Battery's remaining charge as a percentage
- State of Health (SOH) — Overall battery condition and performance
- Thermal Runaway — Dangerous overheating with potential battery damage
- V — Volt(s)

2. Safety Instructions

Before you start working, make sure to read and follow all safety instructions for handling the battery. When installing it, be sure to meet all the rules and regulations in your area. Ask your local authority for the right permits and approvals before you install it.

Lithium Iron Phosphate (LiFePO4) batteries are an inherently safe chemistry. However, safety measures should always be taken as consideration before, during, and after installation and during ongoing use and maintenance. The following safety notices are crucial for both the installer and end users when operating this product normally.

Improper installation could result in harm to the installer, the operator, or others, as well as damage to the battery or connected equipment.

WARNING:

- Do not make any connections or disconnections to the system when the batteries are in operation. Working with active batteries can lead to system component damage or pose a risk of electrical shock.
- Do not charge with a charge voltage above 58.8V.
- Do not charge or discharge the battery when the ambient temperature is above **55** °C (**131** °F).
- Do not install the battery where it may contact conductive materials, water, seawater, strong oxidizers, or strong acids.
- Do not install a battery in a location exposed to direct sunlight, hot surfaces, or hot locations. Do not install batteries in a tight clearance compartment; overheating may result.
- Keep any flammable/combustible material (e.g., paper, cloth, plastic, etc.) that may be ignited by heat, sparks, flames, or any other heat source at a minimum distance of two feet away from the batteries.
- Disconnect batteries immediately if, during operation or charging, they emit an unusual smell, develop heat, or behave abnormally.
- Have a Class ABC or Class BC fire extinguisher on the premises.
- Never short-circuit DC inputs: may result in a risk of electric shock or fire.
- Do not disassemble the battery: Contact BigBattery for proper handling instructions. Incorrect servicing or re-assembly may result in a risk of electric shock or fire, and void the warranty

PRECAUTION:

- ⚠ Qualified personnel must handle all product work to reduce the risk of electric shock.
- ⚠ Follow local and national electrical standards for installation and confirm utility provider and local authorities' requirements before grid connection.
- ⚠ Maintain visibility of warning labels and nameplates.
- ⚠ Choose battery placement with future user safety in mind.
- ⚠ Keep children away from the battery and systems.
- ⚠ Use the team lift technique due to the battery weight.
- ⚠ Use batteries as directed; do not open or modify.
- ⚠ Avoid inserting foreign objects into battery terminals.
- ⚠ Handle batteries and/or battery-powered devices cautiously when using metal tools or when around the system. The risk of electrical arcs or short-circuits can cause serious harm, death, and equipment damage.
- ⚠ Do not charge the battery if the ambient temperature is below **0** °C (**32** °F), nor discharge the battery if the ambient temperature is below **-20** °C (**-4** °F).
- ⚠ Beware of the battery current: Please ensure that the battery is “off” before installing or working on the battery. Use a voltmeter to confirm there is no voltage present.
- ⚠ Always wear protective gear when handling batteries (PPE).
- ⚠ Handle batteries carefully to prevent damage; avoid pulling, dragging, or mishandling.
- ⚠ Inspect batteries before use; don't use damaged or swollen ones; contact BigBattery immediately.
- ⚠ Don't paint any part of the batteries, inside or out.
- ⚠ Make sure all cable connections are properly tightened and secured to prevent any accidents caused by improper installation.
- ⚠ Install and remove batteries using the handles provided.
- ⚠ Do not place any objects on top of batteries.
- ⚠ Before storing the battery for more than 6 months, fully charge the battery and disconnect the battery from your system.

Disclaimer:

BigBattery, LLC has the authority to modify the content here without prior notice. To access the latest manual version, please visit our website at www.bigbattery.com.

3. Introduction

This powerful lithium battery system is designed to set a new standard in energy storage for residential and commercial applications. The NEXUS 2 delivers robust performance, intelligent safety features, and exceptional scalability, making it one of the BEST Batteries Money Can Buy. Whether you're powering your home, business, or off-grid system, NEXUS 2 ensures reliable energy when you need it most.

With advanced $LiFePO_4$ (Lithium Iron Phosphate) chemistry—known for its superior safety and long lifespan—integrated fire suppression, and real-time monitoring through a built-in Battery Management System (BMS), the NEXUS 2 empowers users to take full control of their energy use—safely and efficiently. The BMS is a smart electronic system that protects and manages the battery by constantly monitoring key parameters like voltage, current, and temperature.

These batteries are engineered for high-demand environments and extreme conditions, while offering seamless integration with top inverter brands. Equipped with a NEXUS 2 battery system from BigBattery, you'll always be prepared, powered, and protected. This User Manual is designed to provide a complete understanding of the specifications, features, installation, and safety requirements of your NEXUS 2 battery. Please read and follow all safety instructions before installing or operating your unit.

3.1 Product Description

The 48V NEXUS 2 is a high-capacity lithium iron phosphate (LiFePO4) battery system offering 16kWh of usable energy in a single floor-standing module. It is ideal for both grid-tied and off-grid solar systems, home energy storage, commercial backup, and industrial applications. Each unit can be scaled up to 15 units in parallel, reaching a total capacity of 241.5kWh.

Built with a long-lasting BMS and industry-leading cell technology, NEXUS 2 supports over 8000 cycles at 80% Depth of Discharge. The system includes an integrated aerosol fire extinguishing device, a pre-heating function for cold climates, and multiple layers of protection against overcurrent, temperature extremes, and short circuits.

The system communicates via RS485, CAN, and RJ45 interfaces and is compatible with inverters from EG4, SolArk, Victron, Solis, LUX, etc. Its LED status panel provides real-time SOC and alerts for safety or operational issues. With floor-mount installation and indoor/outdoor compatibility, the NEXUS 2 battery is a durable and intelligent energy solution ready for today's demands.

3.2 Features & Applications

Applications:

- **Residential Energy Storage**
- **Commercial Backup Systems**
- **Off-Grid Solar Systems**
- **Emergency Power Supply (EPS)**
- **Industrial Energy Management**

Features:

- High-Capacity 16kWh Energy Storage
- Lithium-Ion LiFePO4 Chemistry
- Advanced BMS (Battery Management System)
- Integrated Aerosol Fire Suppression System
- Internal Heating Function
- Expandable Up to 15 Units in Parallel
- CAN and RS-485 Communication
- RJ-45 Ports
- Smart LED Status Panel
- Floor Standing Design
- Rugged Construction
- Standardized Power Terminals and Communication Harnesses
- 8000+ Life Cycles at 80% Depth of Discharge (DOD)
- Indoor/Outdoor installation
- Wide Operating Temperature: Charging 0°C~45°C, Discharging -20°C~55°C

4. Packed Components

4.1 NEXUS 2 Battery

The main 16kWh $LiFePO_4$ battery unit. Floor-mounted and preconfigured for connection to inverters or additional packs. This Battery comes with a communication cable, power cables, and a user manual.

INCLUDED WITH SKU: (F-NXUS2-48150-G1)

(x1) 48V 16 kWh NEXUS 2 Battery

Communication Cable

Power Cable (Red and Black)

User Manual

5. Product Specifications

5.1 NEXUS 2 Overview

Figure 1: **NEXUS 2 Battery**

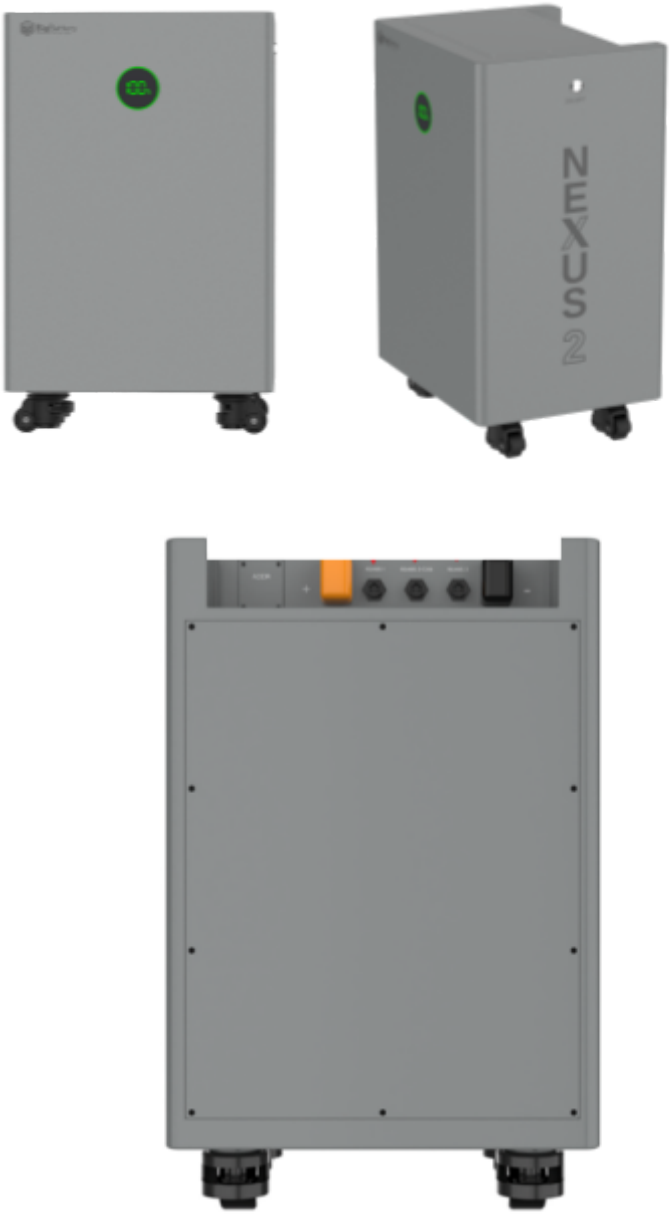

Before handling the battery, always switch it off and verify there is no voltage with a voltmeter to prevent accidental contact with live terminals. Failure to do so could lead to severe injury or death.

5.2 NEXUS 2 System Specs

BATTERY SPECIFICATIONS

SKU	F-NXUS2-48161-G1
System Voltage	48V
Nominal Voltage	51.2V
Chemistry	LiFePO4
kWh Capacity	16.08kWh
Ah Capacity	314Ah
Charging Voltage Range	53.5V ~ 57.6V
Max Charge Voltage	57.9V
Operating Voltage Range	43V~57.6V
Suggested Low Voltage Cutoff	50.8V
Cell Configuration	16S1P
Max Continuous Discharge Current	150A
Max Continuous Power	7.6kW
Max Discharge Peak Current	270A (2s)
Max Charge Current	150A
Charge Temperature Range*	-4°F ~ 120°F
Discharge Temperature Range	-4°F ~ 120°F
Optimal Discharge Temperature Range	59°F to 95°F
Storage Temperature Range (SoC >50%)	1 month: -4°F ~ 113°F 3 months: -4°F ~ 95°F 6 months: -4°F ~ 77°F
Humidity Range	10%~95% (No Condensation)
Dimension (WxHxD)	19.7x30.8x15.7 in 500x782x400 mm
Weight (lbs)	~315 lbs
Altitude	≤2000m
Max Connections	Max 15 in parallel(241.5kwh)
Communications	RS485/RJ45/CAN
Protection Rating	IP54
Certifications	UN38.3
Installation	Indoor/Outdoor Floor-standing installation

*The battery will start charging at ~32°F after the heating element has taken effect.

5.3 NEXUS 2 Battery Diagram

Figure 3: **NEXUS 2 Battery Diagram**

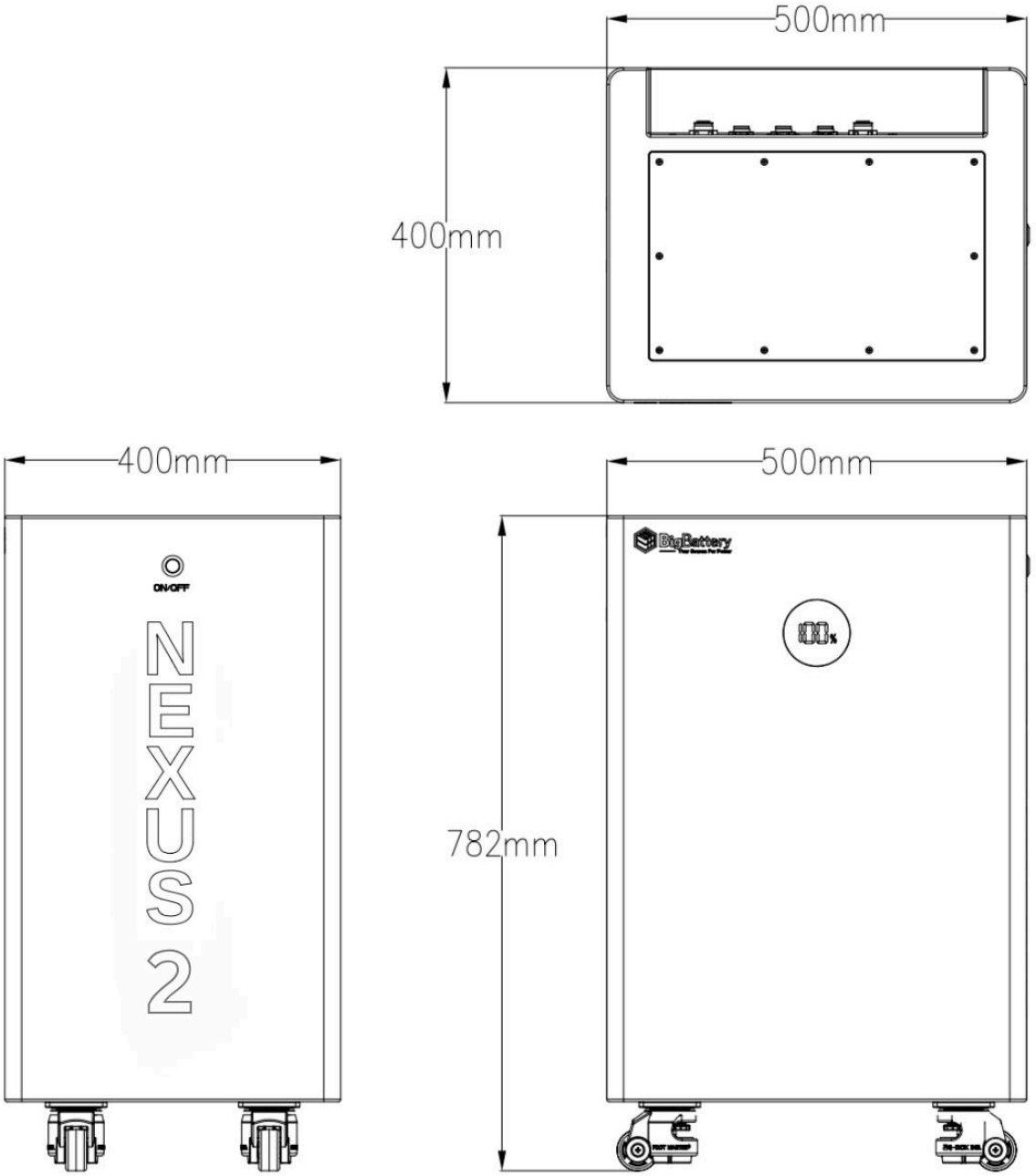

5.4 NEXUS 2 Interface

Figure 5: **48V Nexus 2 Battery Interface**

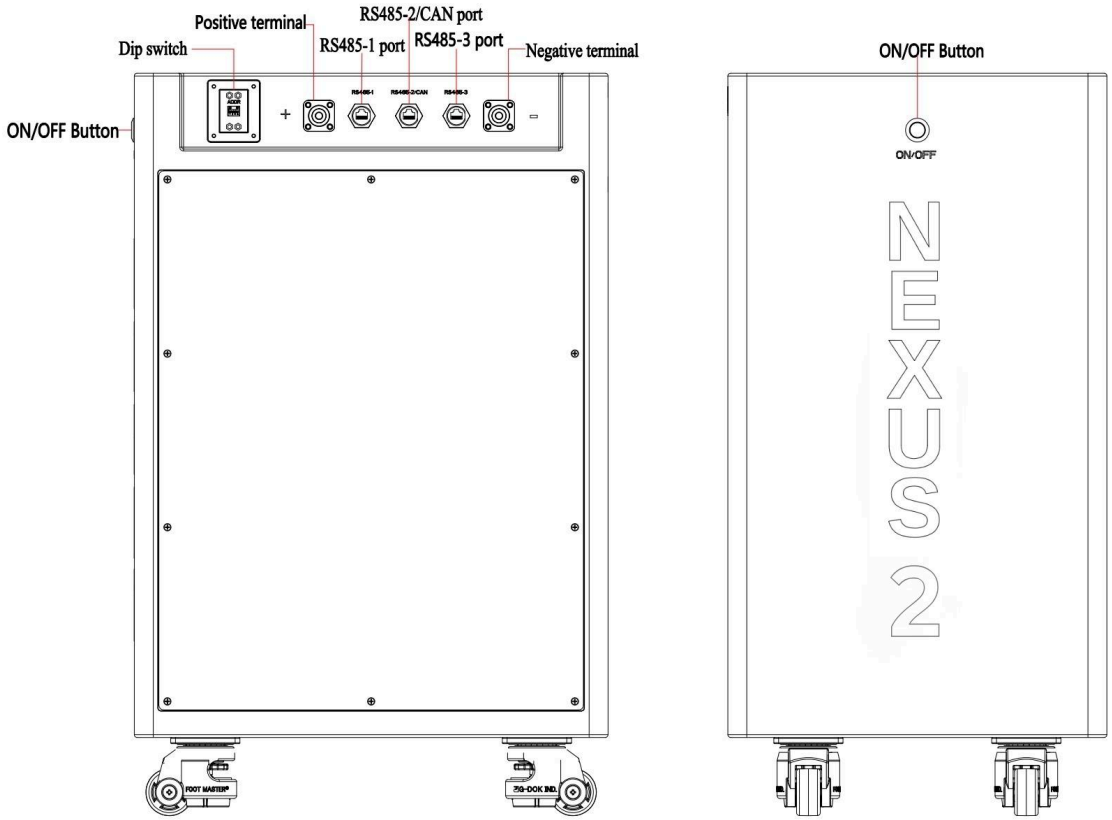

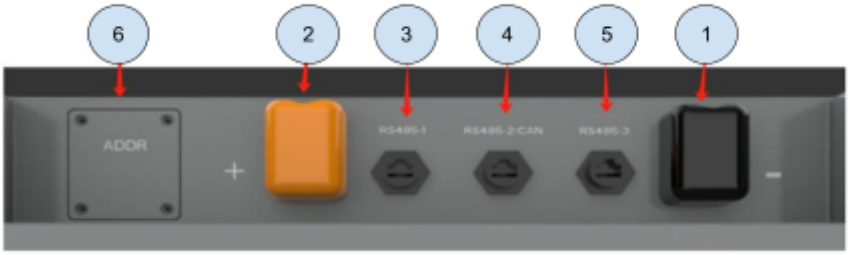

No.	Mark	Description
1	Negative terminal	Used for battery output
2	Positive terminal	Used for battery output
3	RS485-1 port	For communication with the BMS upper computer or EMS
4	RS485-2/CAN port	Used for communication with Goodwe, Solis, Deye, PYLON_, Victron, Sofar, LUX/EG4 inverters or batteries in parallel
5	RS485-3 port	Used for communication with Voltronic Power, BST inverters, or batteries in parallel
6	Dip switch	Used to set the battery IP address when the batteries are connected in parallel

5.5 Display Panel

Figure 6: **NEXUS 2 Status Indicator**

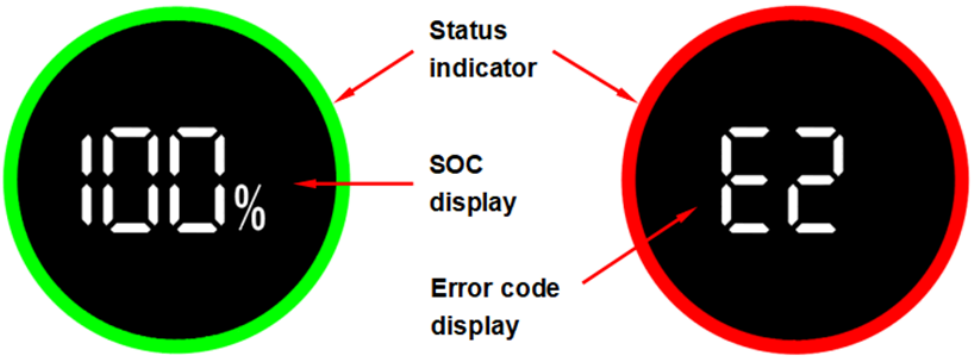

The status indicator has two display states: flashing green and solid red. The display panel lights up when the battery is powered on. Under normal operation, the green light pulses in a breathing pattern and shows the battery's real-time State of Charge (SOC). When the battery enters protection mode, the red light remains on and displays an error code.

Operating Mode	State	Status Indicator			Error Code
		Solid Green	Flashing Green	Solid Red	
Standby	Normal	-	√	-	-
Charge	Normal	√	-	-	-
	Low temperature protection	-	-	√	E5
	Over-temperature protection	-	-	√	E3
	Overcurrent protection	-	-	√	E7
	Short circuit protection	-	-	√	E0
Discharge	Normal	-	√	-	-
	Battery over-discharge protection	-	-	√	E2
	Cell over-discharge protection	-	-	√	E1
	Low temperature protection	-	-	√	E6
	Over-temperature protection	-	-	√	E4
	Overcurrent protection	-	-	√	E8
	Short circuit protection	-	-	√	E0
ALL	MOS over-temperature protection	-	-	√	E9

5.6 Communication Ports Description

Figure 7: **RJ45 Port of Battery**

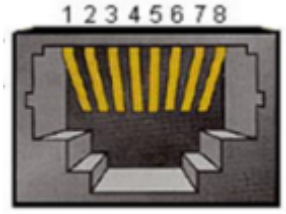

The product uses an isolated communication design and supports both RS485 and CAN communication modes. The default baud rate for RS485 is 115200 bps, with 8 data bits, 1 stop bit, and no parity. The default baud rate for CAN is 500 kbps.

RJ45 port of RS485-1		
RJ45 Pin_RS485-1	**Definition**	**Function**
5	RS485-1A	For communication with BMS upper computer or EMS
6	RS485-1B	
7	RS485-3A	
8	RS485-3B	
RJ45 port of RS485-2/CAN		
RJ45 Pin_RS485-2/CAN	**Definition**	**Function**
1	CAN-2H	Extra CAN Communications.
2	CAN-2L	
3		
4	CAN-1H	For communication with Goodwe, Solis, Deye, PYLON, LUX/EG4, Victron, Sol-Ark inverters protocol
5	CAN-1L	
6		
7		
8		
RJ45 port of RS485-3		
RJ45 Pin_RS485-3	**Definition**	**Function**
1	RS485-4A	For communication with BST inverter protocol
2	RS485-4B	
3	RS485-2A	For communication with Voltronic Power inverters protocol
4	RS485-2B	
5	RS485-1A	For communication with the internal battery parallel operation protocols
6	RS485-1B	
7	RS485-3A	
8	RS485-3B	

Note: Both RJ45 Communication Ports can be used for RS485 or CAN protocols.

5.7 Battery Communication Address

Figure 7: **DIP Switch**

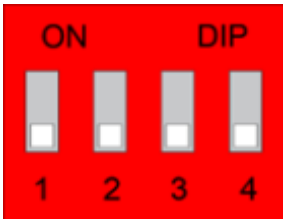

The communication address of the product must be set before use, and this is configured using the DIP switches. The DIP switch positions are labeled 1, 2, 3, and 4 from left to right. Setting a switch down indicates OFF, while setting it up indicates ON, as shown in the figure on the right.

Address	Dial Switch Position			
	1	2	3	4
1(Master)	ON	OFF	OFF	OFF
2	OFF	ON	OFF	OFF
3	ON	ON	OFF	OFF
4	OFF	OFF	ON	OFF
5	ON	OFF	ON	OFF
6	OFF	ON	ON	OFF
7	ON	ON	ON	OFF
8	OFF	OFF	OFF	ON
9	ON	OFF	OFF	ON
10	OFF	ON	OFF	ON
11	ON	ON	OFF	ON
12	OFF	OFF	ON	ON
13	ON	OFF	ON	ON
14	OFF	ON	ON	ON
15	ON	ON	ON	ON

6. Installation

WARNING: Before installing, make sure to review all warnings and precautions in Section 2, as well as the installation safety guidelines in Section 6.1 below.

6.1 Installation Safety Guidelines

- Inspect batteries upon receipt for any signs of damage before use. In case of battery damage, reach out to BigBattery for repair or replacement. Avoid using a defective battery, as it may result in incorrect battery voltage that could potentially ruin your appliances. Damaged batteries have the potential to cause fire hazards.
- Check to ensure that all cables are in good condition.
- Be sure your battery packs are powered "**OFF**" before making/removing any connections.
- It is crucial to never create a short circuit on the external battery terminals. When attaching the battery, ensure that each cable is properly connected to the correct terminal. There should be no conductive material between the terminals that could cause a short circuit.
- Use a screwdriver with a rubber-coated handle.
- **Do not put the NEXUS 2 batteries in series.** The BMS and internal components are not designed to handle this setup, which could cause the modules to fail.
- Always mount the battery in an upright position.

6.2 Installation Requirements

The battery cabinet's placement significantly affects safety, longevity, and performance. It should allow for convenient system wiring, maintenance, and operation, while avoiding high-temperature, high-humidity environments. Ensure there's enough space and strong support for the battery. Use cable specifications that match the equipment's maximum current needs. Arrange the power equipment and batteries logically. Keep the wiring neat, moisture-proof, and corrosion-resistant. During installation, wear an anti-static wristband and have at least two people present.

6.3 NEXUS 2 System Installation

6.3.1 Preparation before installation

The following tools are required to install the battery pack:

Tape measure

Pencil

Multimeter

Screw Driver

Wrench

Hammer Drill

②

When handling the battery pack, it is required to wear the following safety gear:

Insulated Gloves

Safety Goggles

Safety Footwear

6.3.2 NEXUS 2 System Mounting

①

Cut the packing strap, open the carton, and remove the battery and accessories. Verify that all items are intact by referring to Chapter 3, “Packing List.”

②

For floor-standing installation, ensure the ground has a load-bearing capacity of at least 150 kg/m².

③

Connection Ports

1. Power Output: Use UL3512 standard 4 AWG power cables. Connect the battery's positive terminal (P+) and negative terminal (P−) to the inverter's DC input using cables with double O-ring terminals. The recommended torque for tightening the P+ and P− connections is 16 Nm.
2. Communication Ports: RS485-1 is used for the BMS upper computer, RS485-2/CAN is for the inverter connection, and RS485-3 is for the parallel connection. (Alternatively, RS485-3 may be used for the inverter, and RS485-2/CAN for parallel connection — please follow the correct configuration based on your inverter model.)

④

Parallel Configuration: Set the battery address using the DIP switch. Assign address 1 to the master unit and addresses 2–15 to slave units.

Note: After installation, leave at least 50cm of heat dissipation space.

6.3.3 NEXUS 2 System Connections

① **Single Battery-Inverter Communication Setup**

a. Ensure both the inverter and battery pack are turned off.

b. Connect the battery pack to the inverter using power and communication cables. The positive terminal (P+) and negative terminal (P−) of the battery should be connected to the DC input port of the inverter using cables with double O-ring terminals.

c. RS485-2/CAN should be connected to the corresponding communication port of the inverter using a communication cable.

d. Set the address as described in Section 5.7 Battery Communication Address. (For single battery pack setups, set the address to 1 by default.)

Figure 9: **connection**

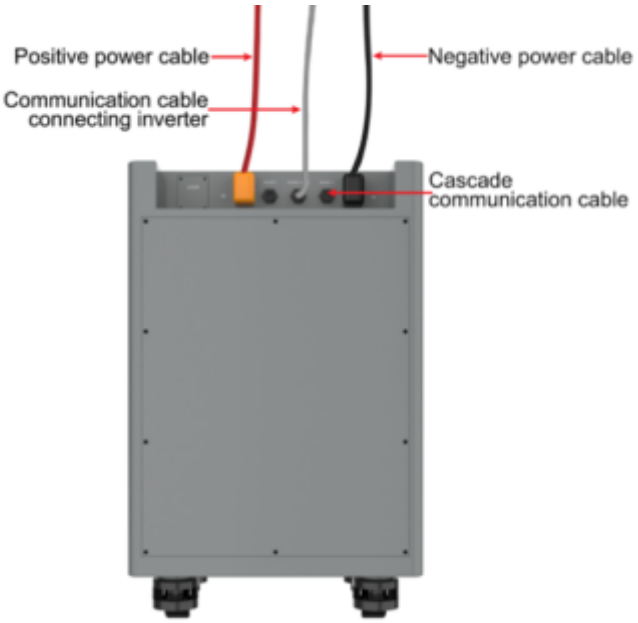

② Multiple Batteries-Inverter Communication Setup

a. Ensure all battery packs and the inverter are turned off.

b. Connect all battery packs in parallel using power cables. The positive terminal (P+) and negative terminal (P−) of each battery should be connected to the corresponding terminals of the next battery using cables with double O-ring terminals.

c. Use power cables to connect the master battery pack to the inverter. The P+ and P− terminals of the master battery connect to the inverter's DC input port.

d. Connect all battery packs using cascaded communication cables.

e. Connect the master battery pack to the inverter using a communication cable.

f. Set the DIP switch address for each battery according to Section 5.7.

③ NEXUS 2 and the upper computer Communication

a. Select the RS485-1 port as shown in the figure below, and insert the RS485 communication cable.

The RJ45 network cable pinout is defined as follows:

- Pin 5 → RS485-1A
- Pin 6 → RS485-1B
- Pin 7 → RS485-3A
- Pin 8 → RS485-3B

When establishing the connection, all four signals must be connected to the upper computer.

b. On the desktop, launch the Upper Computer Software

***Figure 10: Computer Software* (BigBattery-V1.0.26)**

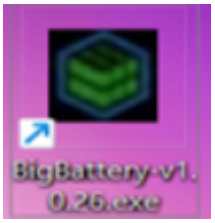

c. Select the appropriate communication port and set the baud rate to 115200 bps. Once the connection is established, the software will begin displaying the battery's parameter data.

You can confirm a successful connection when the system starts polling responses and the communication time increments, indicating active communication between the battery and the upper computer.

***Figure 11:* Connection Panel**

Software Home Page Preview:

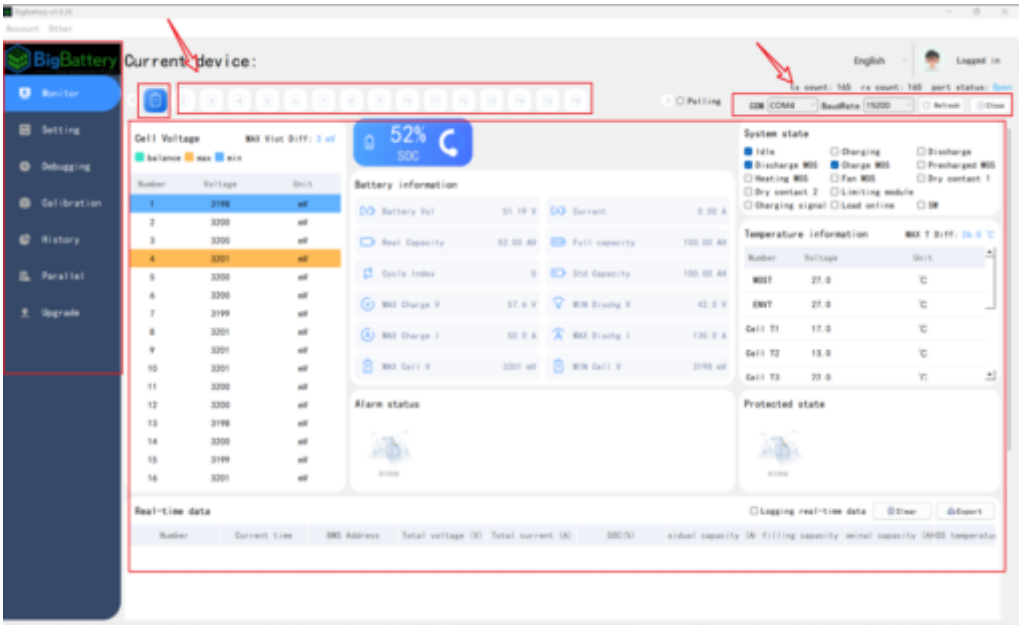

Notes:

After a successful connection, battery parameters will be displayed automatically.

When using a single battery pack, set the DIP address to 1.

For multiple battery packs in parallel, assign addresses from 1 to 15, one per unit.

When multiple battery packs are connected, you must click the “Polling” button to retrieve data.

Communication must be established with the master battery (address 1), as only the master can initiate polling commands.

6.4 NEXUS 2 System Wiring Connection Diagrams

6.4.1 Battery-Inverter Connection Diagram

①

For inverter types: Goodwe, Solis, Deye, PYLON, LUX/EG4, Victron, Sofar, use RS485-2/CAN as the communication port. The connection diagram is as follows:

Figure 12: **NEXUS 2 - Inverter G1 Diagram**

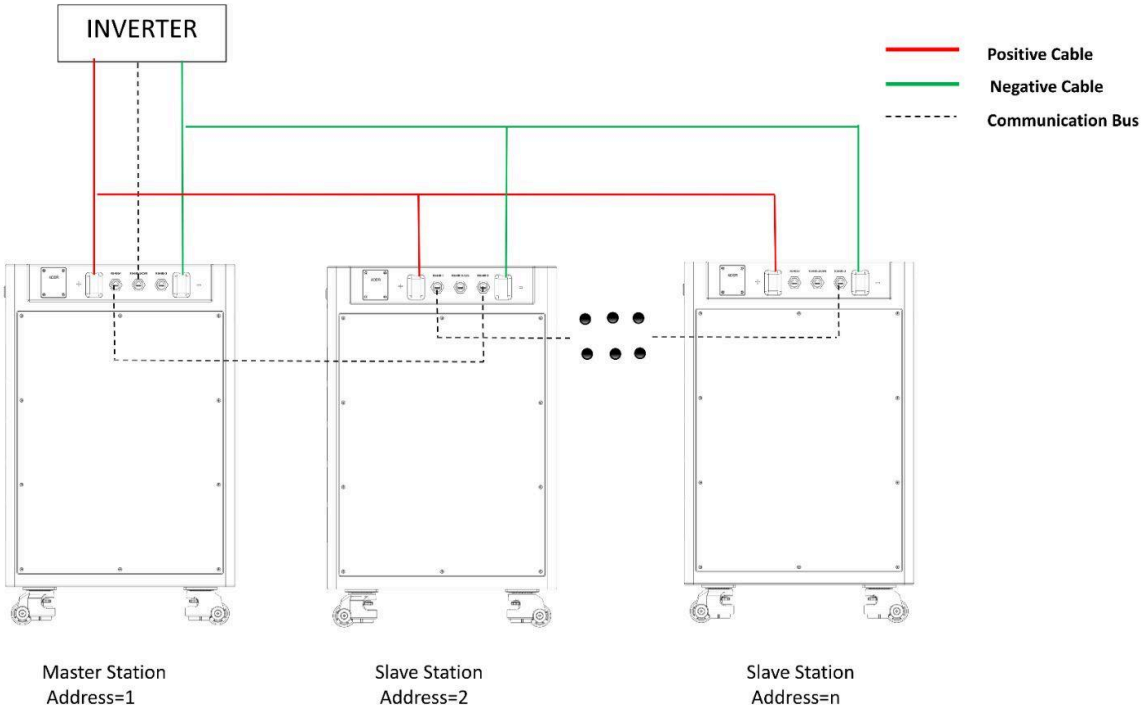

②

For inverter types: BST, Voltronic Power, use RS485-3 as the communication port. The connection diagram is as follows:

Figure 12: **NEXUS 2 - Inverter G2 Diagram**

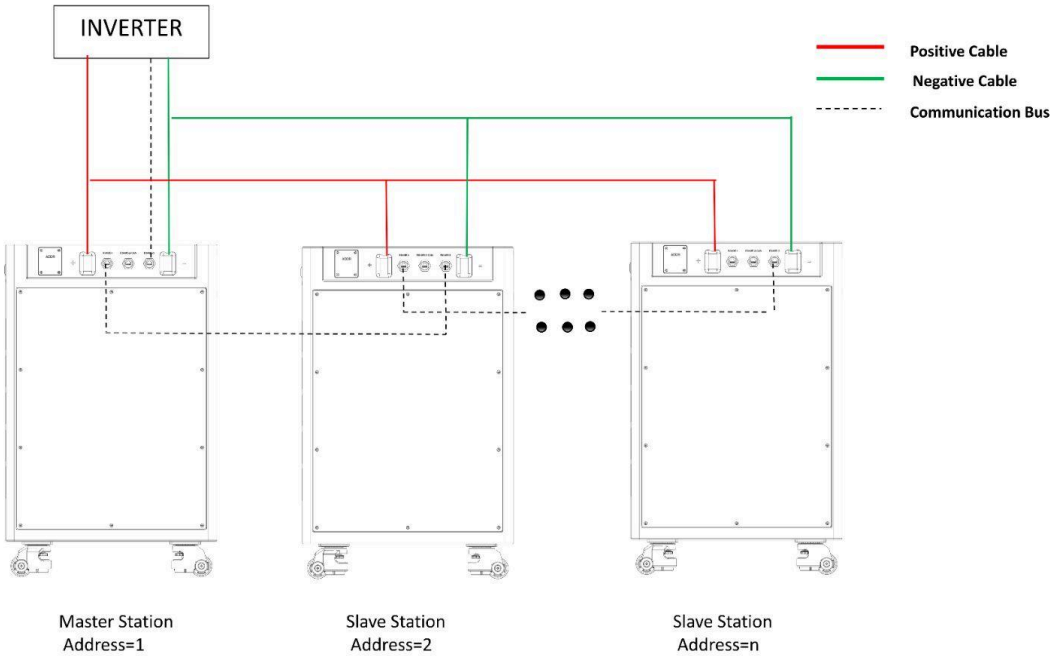

Note:

Each battery pack must have a unique address.

Do not assign duplicate addresses, as this can cause address conflicts and prevent the system from identifying the batteries correctly.

Ensure the battery's positive and negative terminals are connected to the correct terminals on the inverter.

Confirm that the inverter communication settings and protocol are configured properly.

6.5 Grounding (Optional)

The National Electrical Code (NEC) Article 706 states that grounding is not mandatory for battery systems operating below 60 VDC, including the NEXUS 2 system. However, for added safety and system stability, installers may choose to connect the battery system to ground.

The NEXUS 2 battery does not include a dedicated grounding terminal, and grounding cables are not provided. If grounding is required for your specific

installation or local regulations, please consult a licensed electrician and ensure that the grounding method complies with NEC or other applicable standards.

Note: Always ensure the inverter or power system to which the battery is connected is properly grounded.

7. Battery Commissioning

If the NEXUS 2 battery is connected to an inverter and communication is required, the battery's communication address must be configured using the DIP switch, and the appropriate communication port (RS485-2, RS485-3, or CAN) must be selected based on the inverter model.

Refer to Section 5.7 "Battery Communication Address" and Section 6.3.2 "System Connections" for connection and address configuration details.

If communication is not required, the battery can be directly connected to the inverter's DC input. In this case, the inverter should be configured to Lead-Acid mode or a custom/user-defined battery type, depending on inverter compatibility.

7.1 Supported Inverters

Brand	RS485-2	RS485-3	CAN
BigBattery	√	√	√
Goodwe	√	-	√
Solis	√	-	√
Deye	√	-	√
Pylon / LUX / EG4	√	-	√
Victron	√	-	√
Sofar	√	-	-
Voltronic	-	√	-
BST	-	√	

8. Battery Operation Guide

WARNING: Before installing, make sure to review all the parameters listed on chapter 5.2.

8.1 Charging

- During initial use, monitor the charge voltage to ensure it remains within the allowed range: 53.6V to 57.6V.
- Only use the inverter models listed in Section 7.1 (e.g., EG4, Goodwe, Deye, Victron, etc.) with the recommended RS485-2/CAN or RS485-3 ports, and ensure the inverter settings comply with Section 5.2.
- Charging is not permitted below 0°C. If charging is attempted at temperatures under 0°C, the BMS will block charging until the internal temperature rises.
- If the ambient temperature is between 0°C and -20°C, the automatic heating function will activate, raising the internal temperature to 5°C before charging begins (see Section 5.2).
- Use opportunity charging when possible — charging at low currents when available — to extend the battery's lifespan. Avoid fast charging, as it may reduce cycle life.
- For optimal performance, avoid discharging below 10% SOC. Deep discharge is safe, but maintaining at least 10–20% SOC ensures BMS operability and better cycle longevity.
- The NEXUS 2 battery does not require float, equalize, or absorb settings. Set your inverter to constant voltage charging only. Recommended bulk/absorb voltage: 56.8V.

8.2 Discharging

- The NEXUS 2 battery supports full discharge to 0% SOC, and its LiFePO4 chemistry ensures stable voltage during the entire discharge cycle.
- Discharging to 0% is safe, but for maximum lifespan (>8000 cycles), it is advisable to maintain a minimum of 20% SOC.
- Do not discharge the battery at ambient temperatures above 55°C, as the BMS will trigger protection mode.

- If discharged at below-freezing temperatures, you may observe temporary capacity loss. Performance returns to normal once the battery warms above 0°C.
- The BMS automatically shuts down when low voltage is reached — manual intervention is not required.
- Once the battery is fully discharged, remove any load to avoid potential over-discharge attempts from the inverter or connected devices.

8.3 State of Charge

This is the Depth of Discharge of the NEXUS 2 battery:

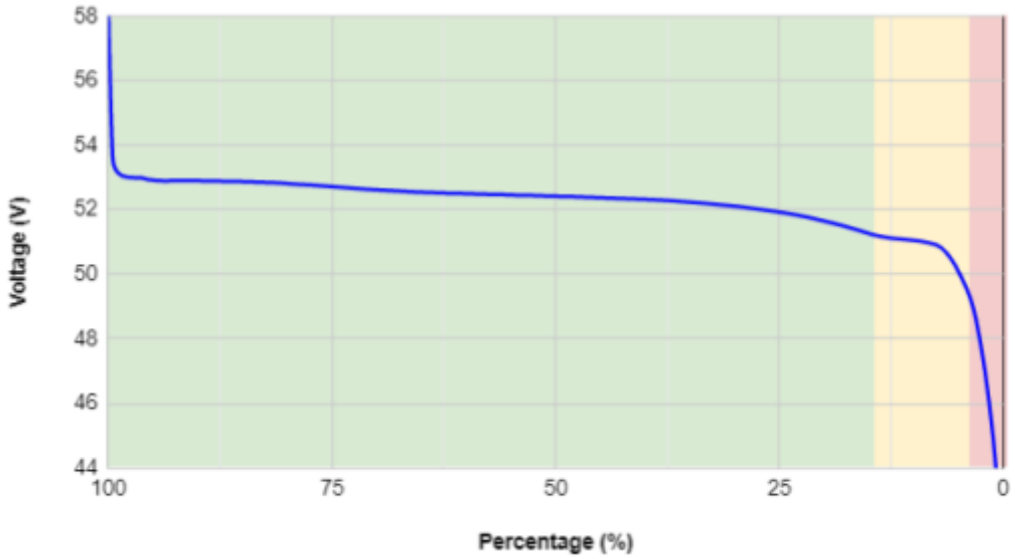

	Cycling in this zone will ensure a reasonable life expentancy
	Ocassionally this zone is OK
	Dropping into this zone can reduce lifespan.

8.4 Storage

- The NEXUS 2 battery uses $LiFePO_4$ cells with low self-discharge, making it suitable for long-term storage. However, to preserve battery health and ensure reliable performance upon reactivation, follow these storage guidelines:
- Before storage, charge the battery to 40%–60% SOC.
- Do not store the battery in a fully discharged state. If the battery is fully charged, discharge it to approximately 60% SOC before placing it in storage.
- Disconnect all cables (power and communication) to avoid parasitic loads during storage.

- The battery should be stored in a dry and ventilated location, away from direct sunlight, corrosive substances, or ignition sources.
- For best results, store at lower temperatures. While the $LiFePO_4$ electrolyte does not expand when frozen, it is recommended to allow the battery to warm to 0°C before reuse.

Storage Duration	Temperature Range	Action Required
≤ 1 month	-20°C to 45°C	No recharge required
≤ 3 months	-20°C to 35°C	Recharge once every 6M
≤ 6 months	-20°C to 25°C	Recharge once every 6M

8.5 Extend the life of your Battery

The NEXUS 2 battery is designed for over 8000 cycles at 80% Depth of Discharge (DOD), under proper usage conditions. To maximize the lifespan and maintain optimal performance, follow these recommendations:

- Limit discharge depth: Avoid frequent discharges below 20% SOC, unless necessary. Shallow cycling significantly extends battery life.
- Maintain optimal temperature: For best performance and lifespan, operate the battery within a temperature range of 15°C to 35°C (59°F to 95°F).
- Respect current limits: Keep both charging and discharging currents under 0.5C (e.g., for a 300Ah battery, do not exceed 140A continuously).
- Do not disassemble the battery: Internal servicing should only be performed by authorized technicians. Opening the battery without authorization voids the warranty.
- Avoid physical impact: Excessive vibration, shock, or compression may damage internal components. Always secure the battery during transportation and installation.
- Clean terminal contacts: Ensure that power terminals are clean and free of corrosion to maintain proper current flow. Check and clean during installation or routine maintenance.

Improper handling, extreme temperatures, or deep cycling may shorten the battery's service life.

9. Service

9.1 Troubleshooting

If the battery does not operate normally due to abnormal conditions, troubleshooting is required. The following table lists common issues and their recommended solutions.

No	Error	Code	Description	Solution
1	Comm Failure	-	Communication with the inverter is abnormal.	Check DIP switch address (Sec. 2.3.3), use correct communication cable, verify inverter protocol and baud rate settings.
2	Unable to Power On	-	Battery does not turn on, display remains off.	Battery voltage may be too low. Apply ≥51.2V from charger or inverter to wake up. Check status with BMS monitoring tool.
3	Charging Not Working	-	Battery is turned on but does not charge.	a) If SOC = 100%, charging is complete. b) If voltage <56.8V and SOC <100%, allow more time. c) Check for blown fuse.
4	Charging Error	E3/E5	Battery temperature too high or too low to allow charging.	Move battery to an environment between **0°C and 45°C**.
5	Charging Error	E7	Charging current is too high.	Reduce charging current.
6	Charging Error	E0	Short circuit detected during charging.	Eliminate short circuit and retry.
7	Discharging Not Working	-	Battery is on, but does not deliver output power.	Check for blown fuse. Contact dealer if necessary.
8	Discharging Error	E4/E6	Battery temperature out of range for discharging.	Move battery to an environment between **-20°C and 45°C**.
9	Discharging Error	E8	Discharge power exceeds limit.	Reduce load or current draw.
10	Discharging Error	E0	Short circuit detected during discharge.	Eliminate short circuit and retry.
11	Discharging Error	E1/E2	Over-discharge protection triggered.	Recharge battery immediately to restore normal operation.
12	Error Code E9	E9	MOSFET over-temperature detected.	Stop using the battery immediately. Wait until temperature returns to normal before resuming use.

9.2 Maintenance

Item	Maintenance	Maintenance Interval
Battery Housing	Clean the outer casing using a dry cloth or vacuum. Do not use liquids or solvents.	Monthly
Terminal Connections	Check terminals for looseness or corrosion. Tighten if necessary.	Monthly
Battery SOC	Ensure SOC is maintained between 40%–60% if stored long-term.	Before storage
Communication Cables	Inspect cables for damage or loose connections.	Monthly or as needed
Power Cables	Inspect for wear, damage or improper connections.	Monthly
Ventilation Area	Ensure the surrounding area is dry, dust-free and well-ventilated.	Monthly
Charge Cycle (Storage)	Perform one full charge/discharge cycle.	Every 9 months (storage)
Storage Charging	Recharge battery if stored.	Every 6 months (storage)

9.3 Monitoring Software

To access real-time BMS data and monitor battery parameters, the BigBattery BMS Monitoring Software (Version: BigBattery-V1.0.26) can be used. Follow the steps below to connect and operate the monitoring system.

Required Items:

- (1) Laptop or PC with a USB interface
- (1) USB to RS485 adapter cable, connected according to Section 2.4.4 (RJ45 pin definition)
- BMS Monitoring Software: BigBattery-V1.0.26

Connection Steps:

1. Download and install the BigBattery-V1.0.26 monitoring software on your computer.
2. Power off all batteries, then set the DIP Switch address of the battery you want to monitor to 1 (see Section 2.3.3).
3. Connect the RS485-1 port of the battery to your USB-RS485 adapter using the RJ45 cable. The pin definition is:
    - 5 → RS485-1A
    - 6 → RS485-1B
    - 7 → RS485-3A
    - 8 → RS485-3B
4. Plug the USB end of the adapter into your laptop and verify the COM port assignment in Device Manager.

5. Launch the BigBattery-V1.0.26 software. On the main screen:
    - Select the correct COM port
    - Set the baud rate to 115200 bps
    - Confirm 8 data bits, 1 stop bit, and no parity bit
6. Click “Connect” to establish communication with the battery.

Monitoring:

Once connected, the software will display:

- Cell voltage and temperature data
- Charge/discharge current
- State of Charge (SOC)
- Protection status
- Fault history and real-time BMS events

10. Recycling

Lithium iron phosphate batteries are potentially dangerous and shouldn't be tossed in the trash. Many websites and organizations can recycle them for free. If you're in the U.S. or anywhere globally, search for "Lithium Battery Disposal Near Me" online. Numerous places can safely dispose of these batteries. Make sure to call first to confirm they're open.

If you can't find a safe disposal option, contact our customer service team instead of improperly disposing of the battery. We’ll take care of recycling the batteries for you.

11. Warranty & Returns

In the unlikely event you are having an issue with one of our batteries we have developed a straightforward warranty & return policy which is detailed in the following link:

https://bigbattery.com/policies/

For more information and support please visit our website and reach us at:

BigBattery LLC.
Technical Support Team
support@bigbattery.com
(818) 280-3091, ext. 1005
400 Maple St
Commerce TX 75428

© 2026 BIGBATTERY, LLC. ALL RIGHTS RESERVED
VERSION 1.0 | INFORMATION SUBJECT TO CHANGE WITHOUT NOTICE
MODEL SKU: F-NXUS2-48161-G1

SCAN THE QR CODE FOR
THE LATEST VERSION OF THE USER MANUAL